# Energy storage battery random inspection items

## Energy storage battery random inspection items

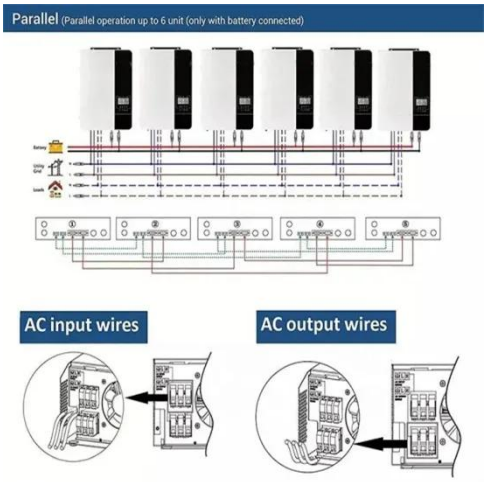


### What are the energy storage mechanism inspection items?

Effective thermal management preserves the electrochemical reaction efficiency and prolongs the life of the batteries. The key inspection items include temperature sensors, cooling ...

Learn More

### Microsoft Word

Because energy storage technology will evolve over time, this checklist will also need to evolve over time. This list is intended as a beginning point for SED inspectors, who will learn along with the ...

Learn More

### Energy Storage Solutions Inspection Checklist and Template

Check for any visible damage or cracks on the exterior of the product. Inspect the product for any loose or missing parts. Ensure that all buttons, switches, and controls are functioning properly. Verify that ...

Learn More

### Battery Energy Storage Systems -

## Checklist

Battery Energy Storage Systems - Checklist This checklist can be used to support the design, installation, and ongoing care and management of Battery Energy Storage Systems.

Learn More

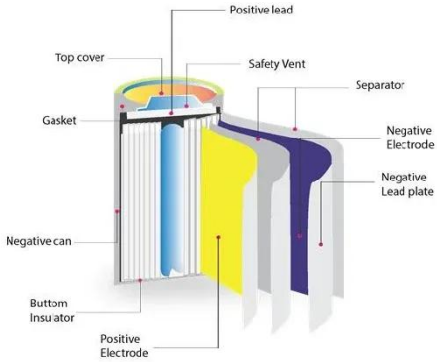

## Energy Storage Systems Installation Inspection Checklist

Inspecting energy storage systems installation is a critical process that ensures the safe and efficient operation of energy storage solutions. This inspection covers a range of components including ...

Learn More

## Battery Energy Storage System Electrical Checklist

The Electrical Checklist is intended to be utilized as a guideline for field inspections of residential and small commercial battery energy storage systems. It can be used directly by local code enforcement ...

Learn More

## Lithium Battery Energy Storage System Inspection: Best Practices for

Summary: This guide explores proven

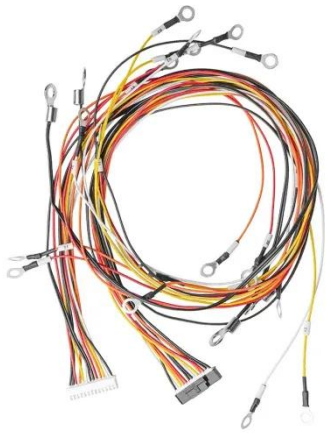

lithium battery energy storage system inspection methods, including visual checks, performance testing, and thermal monitoring.

Learn More

**Random inspection requirements for energy storage batteries**

The model fire codes outline essential safety requirements for both safeguarding Battery Energy Storage Systems (BESS) and ensuring the protection of individuals.

Learn More

**TEST REPORT ANSI/CAN/UL 9540A:2019 TÜV SÜD Test ...**

Test item particulars: According to Unit Level of ANSI/CAN/UL 9540A:2019 Fourth Edition. Purpose of the product (description of intended use): Rechargeable Li-ion Battery System HV48100 BMU-8 uses ...

Learn More

**The Ultimate Guide to Battery Energy Storage System Inspection: ...**

Ever wondered why your smartphone battery suddenly dies at 30%? Now

imagine that happening to a warehouse-sized battery storage system. That's why battery energy storage system ...

Learn More

## Contact Us

For catalog requests, pricing, or partnerships, please visit: https://v4venison.co.za